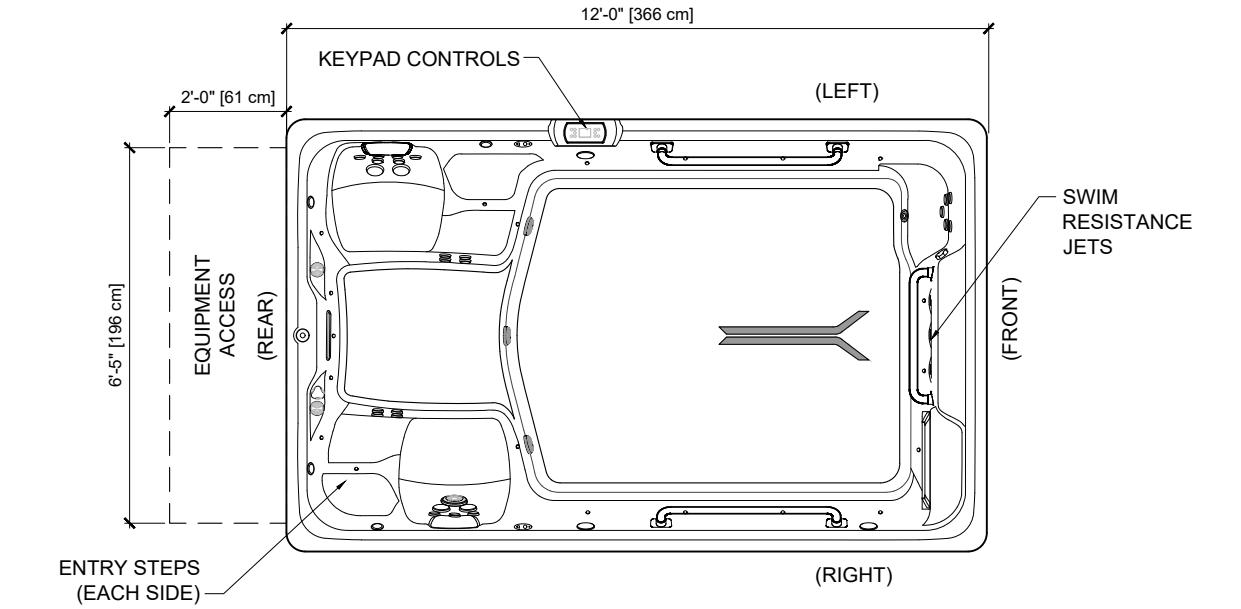

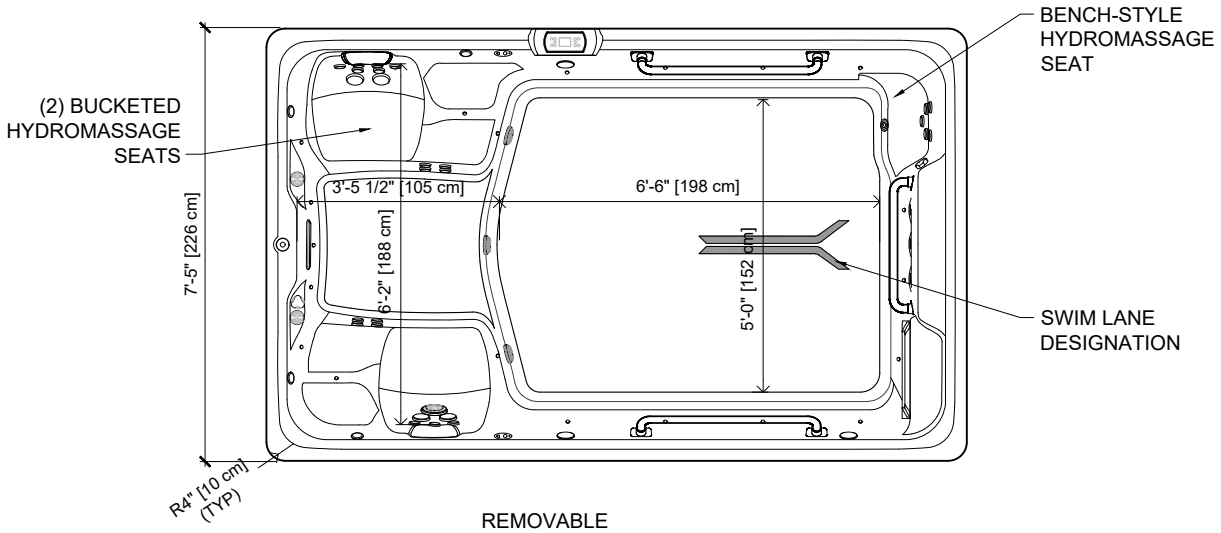

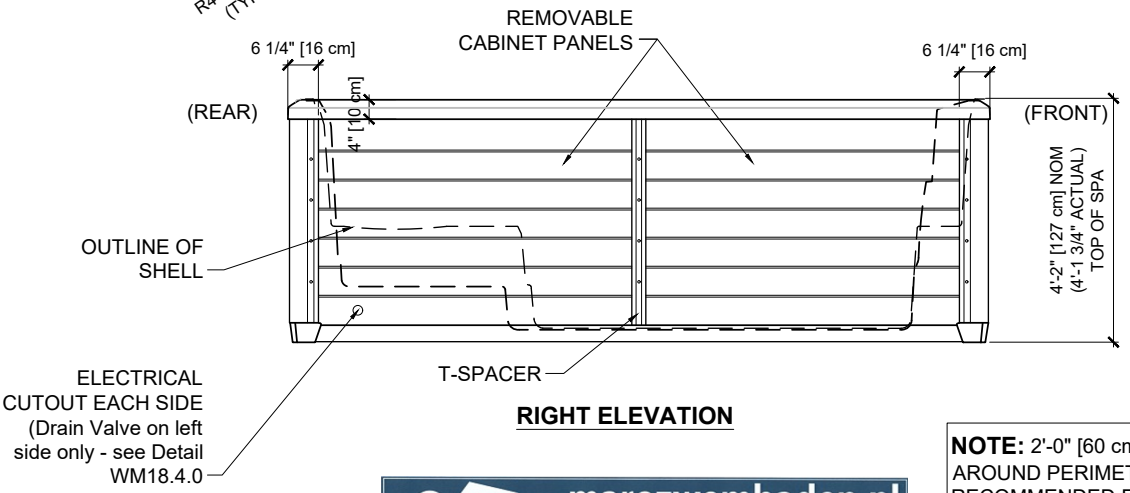

RIGHT ELEVATION

NOTE: 2'-0" [60 cm] ACCESS AROUND PERIMETER RECOMMENDED FOR SERVICE

sinds 1972 marozwembaden.nl zwembaden • sauna's • whirlpools

ENDLESS POOLS®
SWIMMING MACHINES
1601 Dutton Mill Road, Aston PA 19014
www.endlesspools.com
swim@endlesspools.com 800-732-8660

R200

RecSport™ Recreation System

General Information

AQUATIC FITNESS SYSTEMS DETAILS

DETAIL NUMBER:

WM-18.0.1

REV: 2019/01/18

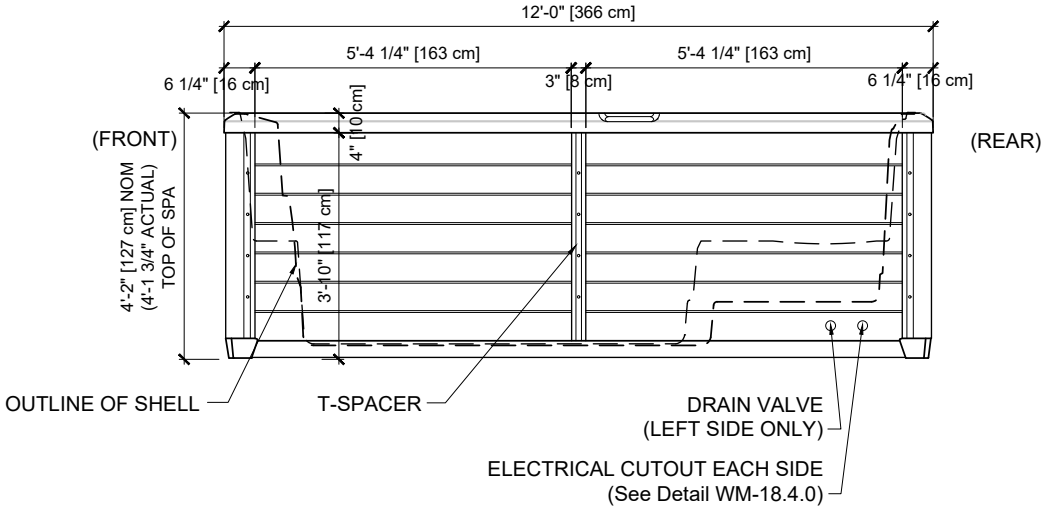

LEFT ELEVATION

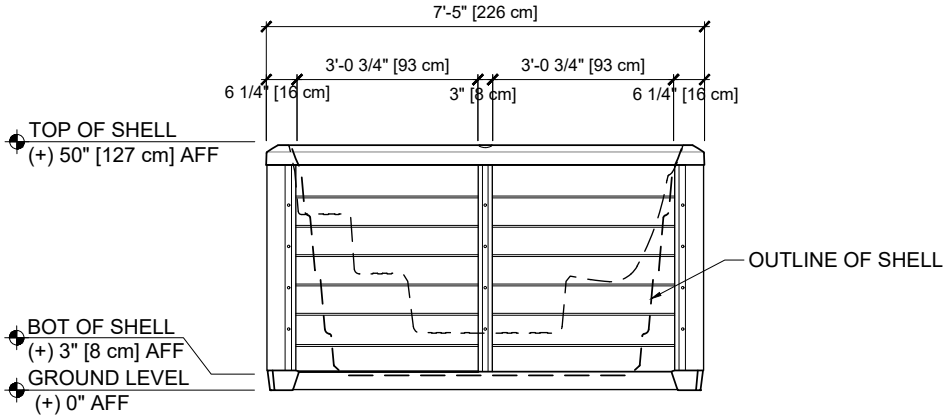

FRONT ELEVATION

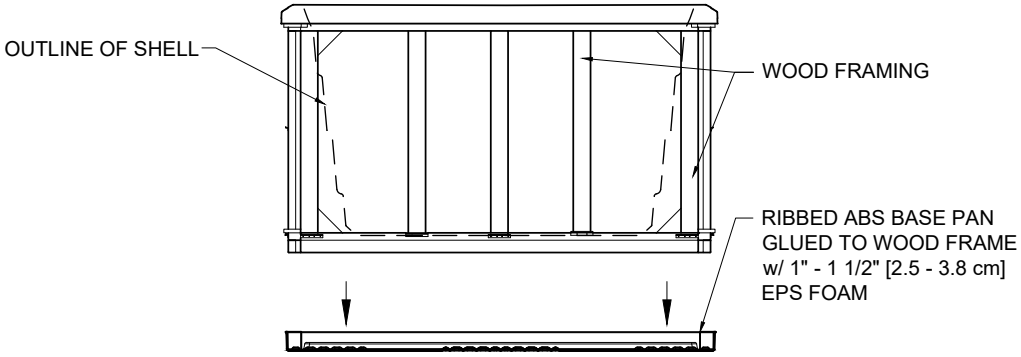

NOTE: 2'-0" [60 cm] ACCESS AROUND PERIMETER RECOMMENDED FOR SERVICE

sinds 1972 marozwembaden.nl
zwembaden • sauna's • whirlpools

ENDLESS POOLS®
SWIMMING MACHINES
1601 Dutton Mill Road, Aston PA 19014
www.endlesspools.com
swim@endlesspools.com 800-732-8660

R200 (50" Tall)

RecSport™ Recreation System

Elevations and Sections

AQUATIC FITNESS SYSTEMS DETAILS

DETAIL NUMBER:

WM-18.1.1

REV: 2019/01/21

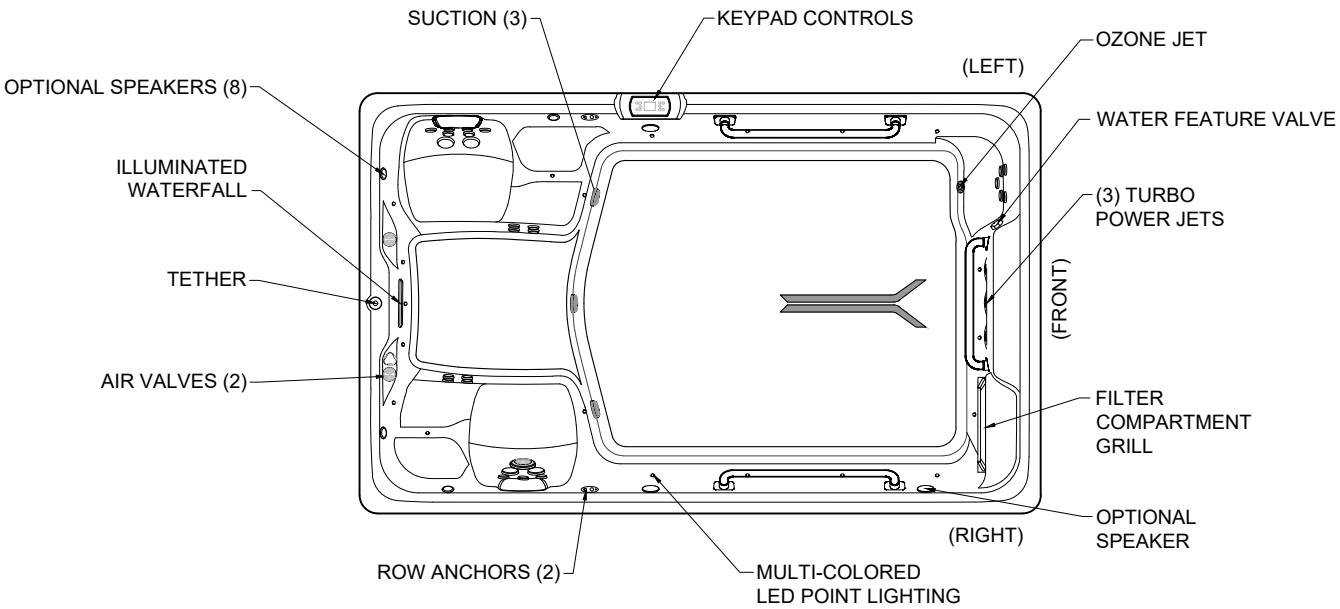

SYSTEM PARTS (R200 SHOWN)

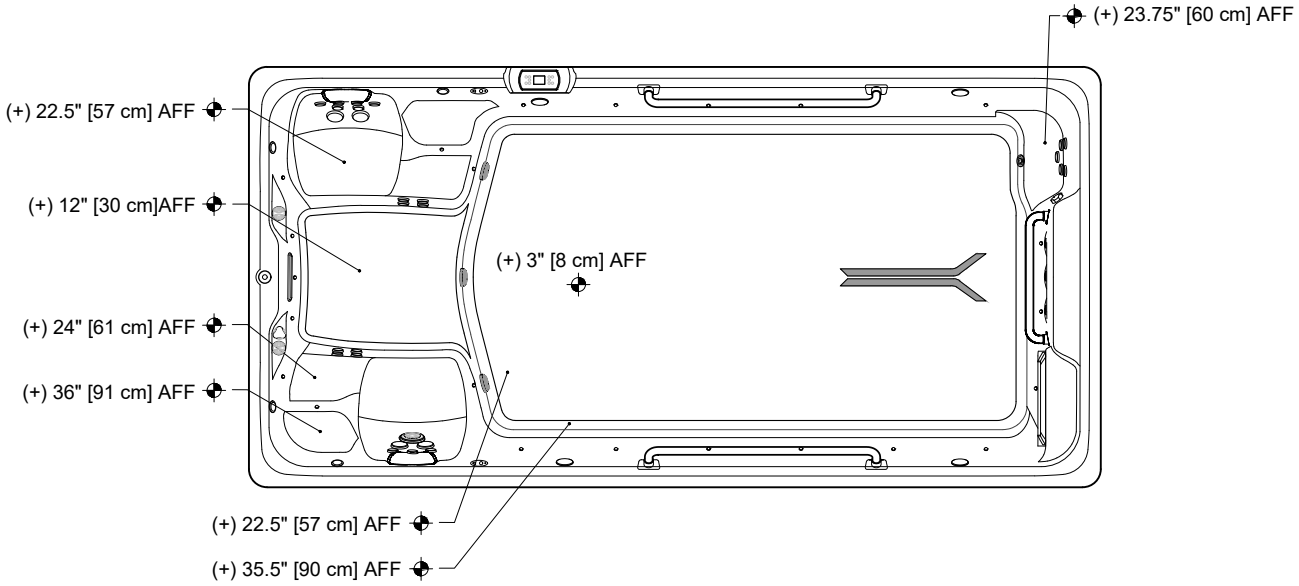

SPOT ELEVATIONS (R500 SHOWN)

sinds 1972 marozwembaden.nl
zwembaden • sauna's • whirlpools

ENDLESS POOLS®
SWIMMING MACHINES
1601 Dutton Mill Road, Aston PA 19014
www.endlesspools.com
swim@endlesspools.com 800-732-8660

R200 & R500 (50" Tall only)

RecSport™ Recreation System

Egress Details with Spot Elevations

AQUATIC FITNESS SYSTEMS DETAILS

DETAIL NUMBER:

WM-18.2.0

REV: 2019/01/14

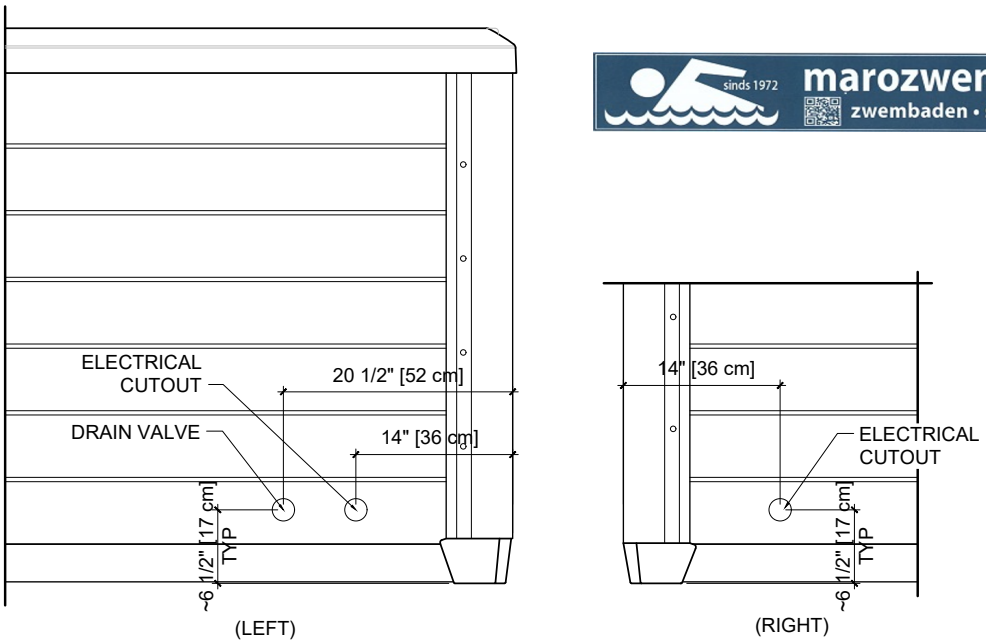

POOL CUT-OUTS

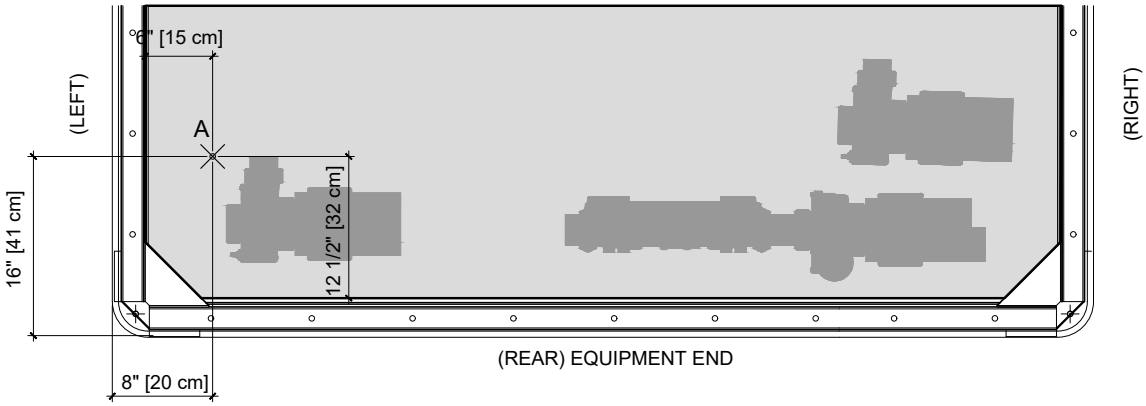

STUB-UP DETAIL (LOOKING DOWN)

Stub-up Directions *(Use a 2" [5 cm] Hole Saw)*

Dimensions from Outside of Skirting:

Part 1: (See Stub-up Detail). The stub-up will be located in the equipment end (rear) under the jetted seats. The center line for Stub-up 'A' can be measured at 8" [20 cm] from the skirting exterior on the left side of the Aquatic Fitness System (AFS) and 16" [41 cm] from the skirting at the rear.

Dimensions from Inside of Cabinet:

Part 2: When the AFS arrives: Remove the vertical T-spacer of the rear skirting by removing the four screws using a 5/16" socket. Slide panel towards center until panel is no longer behind corner. *Disconnect the wiring harness attached to panel before pulling out panel.* While holding panel, first slide panel up, then pull bottom away.

Once inside the AFS skirted cabinet, locate the black painted plywood base and measure from the edges of the plywood for the centerline: for Stub-up 'A': 6" [20 cm] from the left side and 12 1/2" [32 cm] from the end.

ENDLESS POOLS®
SWIMMING MACHINES
1601 Dutton Mill Road, Aston PA 19014
www.endlesspools.com
swim@endlesspools.com 800-732-8660

Electrical Supply Location Options
For X200, X500, R120/R200 & R500

AQUATIC FITNESS SYSTEMS DETAILS

DETAIL NUMBER:

WM-18.4.0

REV: 2019/01/15

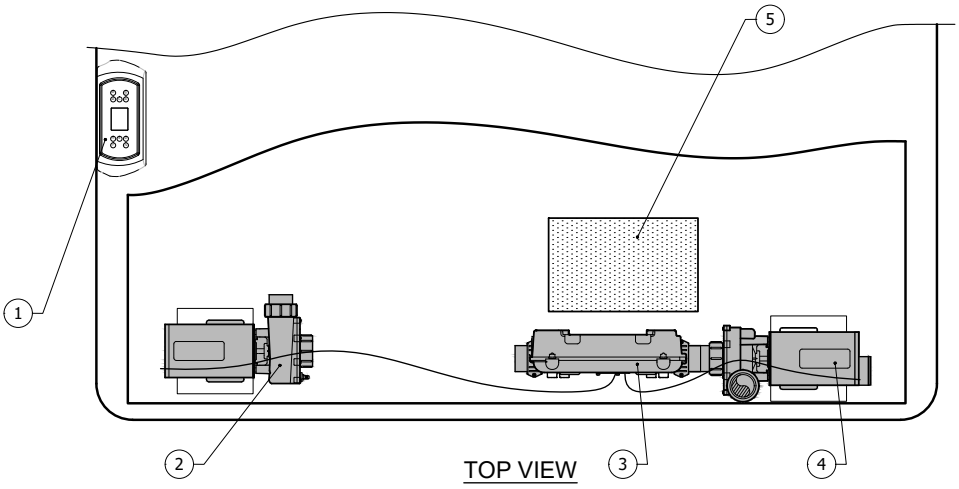

TOP VIEW

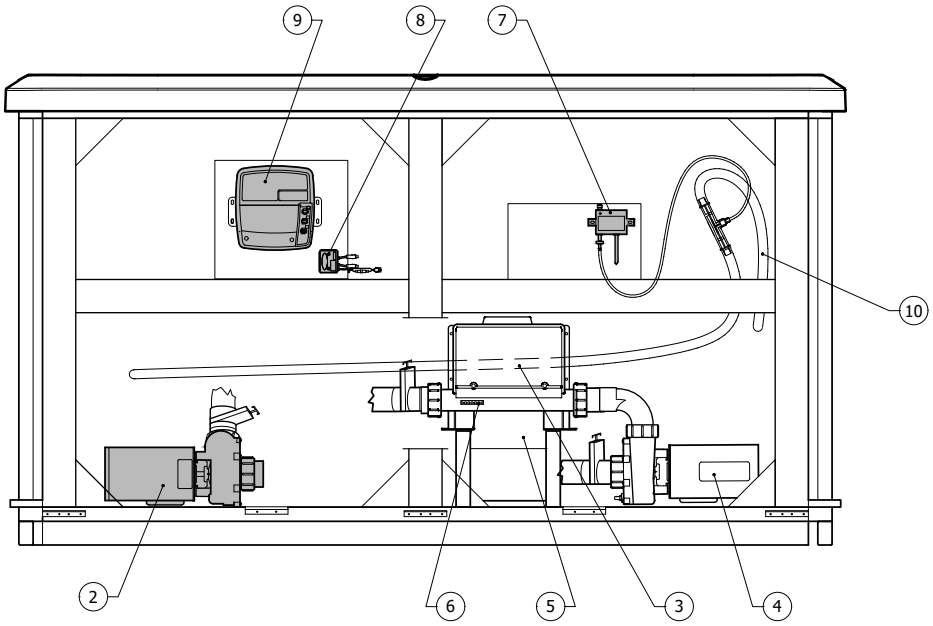

FRONT VIEW

1. KEYPAD CONTROLS
2. SWIM JETS PUMP
3. CONTROLLER/HEATER
4. NYDROMASSAGE JETS & FILTER PUMP
5. OPTIONAL AUDIO SUBWOOFER
6. BONDING TERMINAL
7. CD OZONE UNIT
8. LIGHT CONTROLLER
9. OPTIONAL AUDIO BLUETOOTH AMPLIFIER
10. TO OZONE JET

sinds 1972 marozwembaden.nl
zwembaden • sauna's • whirlpools

ENDLESS POOLS®
SWIMMING MACHINES
1601 Dutton Mill Road, Aston PA 19014
www.endlesspools.com
swim@endlesspools.com 800-732-8660

R200 and R500

RecSport™ Recreation System

Equipment Parts Diagram

AQUATIC FITNESS SYSTEMS DETAILS

DETAIL NUMBER:

WM-18.5.0

REV: 2019/03/14